Health and Charge Indicators for Battery Energy Storage Systems in Electric Vehicles Applications

Rolando Antonio Gilbert Zequera, Anton Rassõlkin, Toomas Vaimann, Ants Kallaste

Department of Electrical Power Engineering and Mechatronics, Tallinn University of Technology, Tallinn, Estonia
rogilb@taltech.ee, anton.rassolkin@taltech.ee, toomas.vaimann@taltech.ee, ants.kallaste@taltech.ee

2022 IEEE 20th International Power Electronics and Motion Control Conference (PEMC) | 978-1-6654-9681-0/22/$31.00 ©2022 IEEE | DOI: 10.1109/PEMC51159.2022.9962858

***Abstract*— This article focuses on the different charge and health indicators of battery energy storage systems to provide an overview of the different methodologies implemented in optimal lifetime assessment, as well as on some introductory simulations implemented to analyze the impact of model parameters. Our aim was to familiarize the reader with the importance of lifetime evaluation in Battery Energy Storage System (BESS) by using different models given in the literature. Introductory simulations in Simulink were implemented to illustrate the electrical and thermal responses of the BESS.**

Keywords*— *State of Charge, State of Health, batteries, Electric Vehicles.

I. INTRODUCTION

Battery degradation is a point of interest for the scientific community due to the current development of new energy storage technologies. As the demand for energy and issues of sustainability is increasing, climate change mitigation shouldbe promoted, and CO2 emissions should be reduced. Battery Energy Storage Systems (BESSs) are essential components ofElectric Vehicles (EVs) that improve the efficiency of the system; however, some indicators explain lifetime reduction and aging processes during operating conditions. To understand battery degradation, two specific levels are addressed: design and operation [1]. Regarding the design level, the main usage factors are the Depth of Discharge (DOD), ambient conditions, and the State of Charge (SOC), which have a direct impact on lifetime and battery aging. In the operation level, an online lifetime estimation is essential due to the faster aging process experienced by low-capacity batteries in comparison with batteries in the first gradients [1].

Some studies have addressed different types of degradation mechanisms, using both programming algorithms and experimental techniques, such as X-ray Diffraction, Scanning Electron Microscopy (SEM), and Electrochemical Impedance Microscopy (EIM) [2-6]. Through impedance microscopy and pulse current tests, dependence on battery impedancecharacteristics has been found to play a critical role in batteryconditions. Reduction in battery efficiency and power capacity are the results of significant changes in batterycondition and aging. [4]. In the same manner, material characterization has been proposed as a methodology to identify different lithium microstructure formations in the anode components, providing a solid understanding of the behavior of battery components in the study of energy storagesystems from the electrochemical point of view [5]. In 2019,two remarkable studies focused on aging and lifetime assessment of batteries were conducted to provide parameterestimation for battery modeling. First, Sutter et al. [3] proposed a Fractional Differential Model (FDM) that demonstrates a plausible implementation in the Battery Management System (BMS) over the SOC range. Then Kimet al. [2] suggested the identification of physical parameters of lithium-ion batteries and implementation of a Bayesian harmony search algorithm, which achieved optimal development of the battery degradation model using an electrochemical approach.

Different Health Indicators (HIs) have been reported to determine efficient methodologies for accurate lifetime estimation [15,17,18,21]. Among the most remarkable are impedance parameters to detect degradation behavior and health monitoring, pulse voltage response through the application of Machine Learning algorithms, and HPPC (Hybrid Pulse Power Characterization) to estimate prognostics and health management. However, parameter identification, experimental measurements, and additional methods are fundamental to complement the lifetime assessment of BESS.

In Section 2, methodologies to determine the SOC and State of Health (SOH) indicators based on BESS are explained. Section 3 provides an introductory simulation of Li-ion batteries to illustrate the impact of the model parameters on battery performance. Section 4 addresses future research andopportunity areas to provide an optimal lifetime assessment of BESS.

II. HEALTH AND CHARGE INDICATORS

SOH is an essential parameter to analyze and evaluate the Remaining Useful Life of the BESS, which has encouraged the development of new data-driven and statistical approaches. However, some indicators must be considered to guarantee the efficiency of the electric vehicle and avoid failures, making model input selection a challenging task to accomplish. According to reference [11], most commonly, the SOH is defined as the percentage of ratio between the rated capacity at the beginning of the battery life and the current maximum available capacity of a lithium-ion battery.

Mathematically, the SOH is defined as follows:

$$SOH = \frac{C_{aged}}{C_{new}}, \quad (1)$$

The research has been supported by the Estonian Research Council under grant PSG453 "Digital twin for propulsion drive of an autonomous electric vehicle".

Authorized licensed use limited to: Tallinn University of Technology. Downloaded on January 09,2023 at 14:22:10 UTC from IEEE Xplore. Restrictions apply.

where variables C_{aged} and $C_{new}$are defined as the capacity of the battery after certain cycles and the original capacity of the brand-new battery respectively. The capacity refers to the maximum number of ampere-hours that can be drawn from the battery when this device is completely discharged/charged at certain conditions.

In 2015, Zhang et al. [12] proposed a method to estimate the SOH for hybrid electric vehicles. It was based on the calculation of the bulk capacitor, whereas this parameter is defined as the element that stores energy and has a high capacitance in the Equivalent Circuit Model (ECM) [12,13].

The contribution of Zhang´s investigation lies in three points:

1. The accuracy of the model is guaranteed by using a nonlinear discretization system at the sample timedirectly.
2. The attenuation factor of the bulk capacitor is obtained from the collected data and reliability analysis.
3. Estimation error has a convergence and is guaranteed by a nonlinear observer.

Regarding the SOC indicator, it is also an essential parameter that integrates the BMS to obtain necessary energy requirements of EVs, such as charging, power, and safety information, to ensure optimal operating mechanism from the battery to the vehicle.

The SOC is defined by the following expression according to [14]:

$$SOC = SOC_0 - \frac{\int \eta_i(t)dt}{C_{cell}}, \quad (2)$$

where η_i represents the charge/discharge rate, C_{cell} is defined as the nominal capacity of the battery and SOC_0 is the initial value of the SOC.

Different algorithms have been applied to provide an accurateestimation of the SOC; among the most important are the Extended Kalman Filter (EFK) and the Unscented Kalman Filter (UFK). The EKF was proposed in 2004 by Gregory Plett [26-28] to estimate the operating condition of the BMS, which includes SOC, instantaneous available power and capacity byapplying a linearization process at every time step with a linear time-varying system (LTV). Although the above algorithms have been widely implemented to ensure the safetyand reliability of BESS, focused on lithium-ion batteries, they experience some drawbacks, such as low precision, high complexity, and large dimensions, which is why new methodologies are required. [15].

In 2018, Wang et al. [14] conducted a study to calculate boththe SOC and SOH of a lithium-ion battery; a Dual Unscented Kalman Filter (DUFK) that considers concentration and electrochemical polarization was proposed to fulfill online parameters identification and SOC estimation. The main contribution of Wang´s research is as follows [14]:

1. The algorithm considers real-time parameters, avoids the influence of ambient factors, and compensates for noise signals during the operation.
2. Estimation of the SOC and SOH is obtained in real- time through changeable parameters that are related tothe fading state of the battery.
3. Higher accuracy than EFK and UFK algorithms is obtained, achieving an error of less than 3%. For mathematical understanding, the reader is encouragedto consult the reference.

Regarding specific HIs, literature reviews in [15,17,18,21,24]consider seven diverse types of HIs into three main categories: (1) Impedance-based HI, (2) Voltage-based HIs, and (3)Curve-based HIs. For the purpose of this research, Impedance- based HI and Voltage-based HIs are described.

A. Impedance-based HI

The Equivalent Circuit Model (ECM) [15] is normally implemented to calculate the impedance-based HI, which depends largely on the SOC estimated either by an ampere-hour counter or coulomb counter, accumulating charge and integrating the battery current. In 2017, Yuan and Dung [15] conducted a study that applied an offline state-of-health estimation based on transfer resistance for high-power lithium-ion batteries. They proposed a fast and efficient three-point impedance extraction method. Mathematically, the SOC estimation is defined as follows:

$$SoC(t) = SoC(t_0) + \frac{\int_{t_0}^{t_0+\Delta t_{\frac{c}{d}}} I_{bat}(t)dt}{Q_f} \cdot 100\%. \quad (3)$$

Considering the previous equation, the parameter $SoC(t)$ is the SOC at a specific time; $SoC(t_0)$ is the SOC value at the initial time t_0; Q_f is defined as the full capacity value of the battery cell; $I_{bat}(t)$ is the battery current, having a positive value when it is charged and negative when it is discharged; finally, $\Delta t_{\frac{c}{d}}$ is the time period of the charging/discharging regime [15]. The SOH estimation using the impedance three-method was proposed by Haifeng et al. [16] and is defined according to the next equation:

$$SoH = \frac{X_{(E)} - X_{(A)}}{X_{(E)} - X_{(N)}} \cdot 100\%, \quad (4)$$

where X is defined as the impedance in the ECM and the subindexes (E), (N) and (A) are the parameters of an End of Life (EOL) cell, fresh cells and aging cells respectively. To test the performance indexes in the Haifeng´s research, three experiments were conducted: 1) repetitive charge-relaxation test; 2) external resistance test; 3) accelerated aging test. Among the major contributions of the three-point impedance extraction method are a low estimation SOC error of 6.1%, a simple and not complex numerical computation and a significant aging change with battery degradation against external resistance [15].

Some authors have suggested other important approaches for applying reduced impedance models, such as Xiong et al. in 2017 [17]. They implemented a double polarization model to estimate health monitoring using parameter

Authorized licensed use limited to: Tallinn University of Technology. Downloaded on January 09,2023 at 14:22:10 UTC from IEEE Xplore. Restrictions apply.

estimation, and Wang et al. applied the dual unscented for online parameter identification and SOC calculation [14].

B. *Voltage-based HIs*

In this category, voltage-based HIs normally depend on the voltage response curves under specific current pulse tests. Several features must be considered in order to establish the SOC estimator, so that the keen points and slope of the voltage curve at the beginning and end of the current test are fundamental due to the feature selection.

In 2018, Meng et al. [18] implemented a Support Vector Machine (SVM) algorithm to provide a SOC estimation, executing a short-term current pulse test. Tests were performed using a LiFePO4 battery and the parameter selection is summarized in the following table:

TABLE I. PARAMETERS FOR LIFEPO4 SOC ESTIMATION [18].

Parameter	**Value**
Operating temperatures	-30 to 50 °C
Voltage range	2.0 to 3.6 V
Nominal voltage	3.3 V
Maximum charge current	10 A
Maximum discharge current	70 A
Capacity	2.5 Ah

To proceed with the SVM algorithm implementation, the extracted indicators from the pulse voltage response are considered in the following function:

$$y = f(V_A, V_B, V_C, V_D, K_1, K_2, K_3, K_4). \quad (5)$$

In the previous equation, the variable V represents the keen point of the pulse voltage and K is the slope between each point. In the same manner, the estimation of the SOH in a battery can be calculated by identifying the resistance and the capacity, as expressed in the following equations [19-20]:

$$SoH = \frac{R_{EOL}-R_{bat}}{R_{EOL}-R_{new}}.100\%, \quad (6)$$

$$SoH = \frac{Q_{bat}-Q_{EOL}}{Q_{new}-Q_{EOL}}.100\%, \quad (7)$$

where R and Q are the resistance and battery capacity, whereas the subindexes EOL, bat and new represent the corresponding measurements of the End of Life, battery at current time and new cells respectively. It is important to mention that the main contribution of Meng et al. [18] is based on the voltage response during the aging process; the testing method showed an effectiveness for a period of 37 weeks and demonstrated an estimation error of less than 1%.

Another approach to calculate health management of lithium-ion batteries was proposed by Hu et al. in 2013 [21], in which an ameliorated sample-entropy-based capacity estimator was implemented. In this test, several parameters were considered and an HPP (Hybrid Pulse Power Characterization) is used as an input to characterize the capacity loss, a total of eight aging datasets were collected to evaluate the estimator. Finally, three temperature ranges were considered and the results demonstrated a good performance with an average relative error of 2% in the health management strategy.

III. MATLAB SIMULATION AND SOC IMPACT ON MODELPARAMETERS

In this section, we performed three introductory simulations in MATLAB using the Simulink library. The main purpose was to integrate the battery performance and demonstrate the impact of input parameters on the model, focusing on the SOC calculations over a period of time.

In the first simulation model, a simple battery cell is implemented according to the diagram in Fig.1.

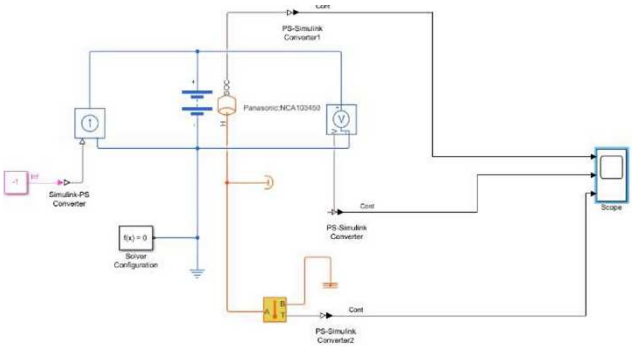

Fig. 1. Simulink diagram of a simple battery cell. The Panasonic NCA 103450 battery type is implemented.

In the figure, the thermal and electrical effects are representedby the orange and blue colors, respectively, to appreciate thebehavior of the battery in the discharging process. Accordingto the Simulink specifications, the user is able to select and implement several types of batteries, which depends on the manufacturer and the part number. The model implemented in the simulation corresponds to a Panasonic NCA 103450 battery.

The Open Circuit Voltage Resistance (OCV-R) model shown in Fig. 2 has been considered to characterize a lithium-ion battery into a high-level system.

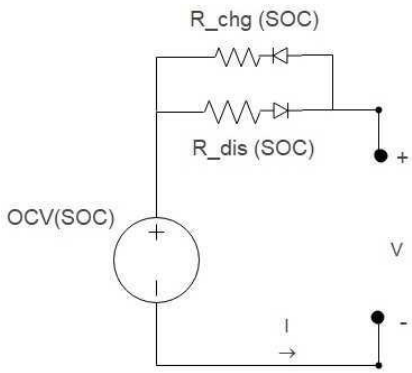

Fig. 2. Graphic representation of the OCV-R model.

Authorized licensed use limited to: Tallinn University of Technology. Downloaded on January 09,2023 at 14:22:10 UTC from IEEE Xplore. Restrictions apply.

The parameters $R_{chg}(SOC)$ and $R_{dis}(SOC)$ are the internal resistances during the battery charging and discharging processes, respectively, whereas the variable V is the voltageof the battery, and $OCV(SOC)$ is defined as the Open CircuitVoltage. The relationship between the OCV and SOC dependson the chemistry of the battery and the direction of the charging and discharging processes.

To calculate the SOC, the following equation is used:

$$SOC = SOC_0 - \frac{1}{C_n} * \int_0^t I(t)dt \,, \tag{8}$$

where $C_n$is defined as the total capacity of the battery and SOC_0 represents the State of Charge at the initial time. After calculating the SOC, the voltage of the battery is calculated by the following equation:

$$V_T = OCV(SOC) - I * R(T, SOC). \tag{9}$$

It is important to point out that both $OCV(SOC)$ and $R(T, SOC)$ are functions dependent on the SOC; however, the current I is a scalar value whose specific value is kept constant.

To simulate the OCV-R model, an excel dataset was collected, and the corresponding input variables are: SOC, OCV, Charge Resistance, and Discharge Resistance. Regarding the constant parameters, the total capacity of the battery C_n and the constant current I have the values of 2.3AHand 2.3A, respectively.

The corresponding diagram that implements the prior equations of the OCV-R model is illustrated in Fig. 3.

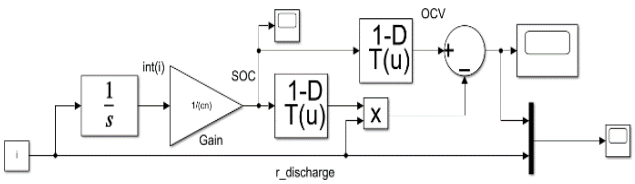

Fig. 3. Simulink diagram of the OCV-R model.

After running the simulation for a time period of 1 h, the following curves were obtained; they show the SOC for boththe simple battery cell and OCV-R model behavior:

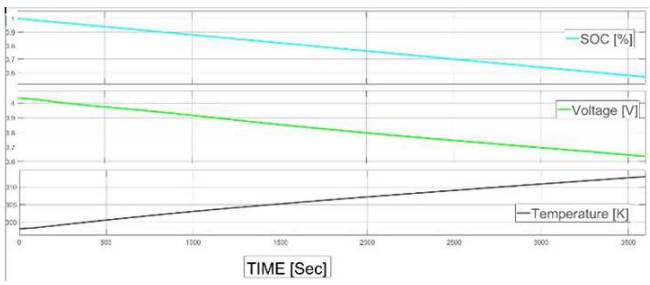

Fig. 4. Curves calculated in the Simulink library by implementing a simplebattery cell model.

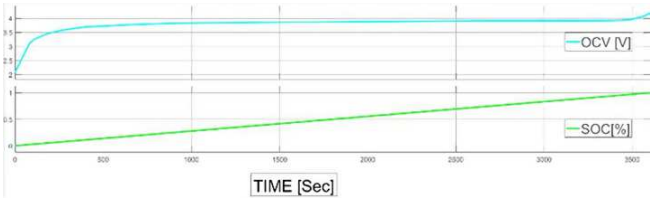

Fig. 5. Curves calculated in the Simulink library by implementing the OCV-R model.

Fig. 4 shows the thermal and electrical effects of the battery.The first plot indicates the SOC evolution using a simple model for the Panasonic NCA 103450 battery type. The second plot presents the voltage evolution. Both plots illustrate a linear decreasing behavior due to the dischargingprocess, whereas the temperature distribution is shown in thethird plot. The thermal mass of the battery plays an important role in the simulation, especially regarding the thermal effects; thus, the recommended value is around 400*0.05 J/K according to the thermal properties of lithium-ion batteries and the Mathworks documentation [25]. Fig. 5 shows the evolution of the SOC and OCV using the OCV-R model for a charging process and indicates a behavior different from the first graph. The main explanation is based on the complexity of the model and the mutual dependence of the input variables in Eqs. (8) and (9).

Finally, the third model also implements a high-level battery system by using the UKF, which incorporates thermal and electrical properties for parameter estimation and simulation. In this case, the output variable corresponds to the SOC estimation and is based on the ECM [15].

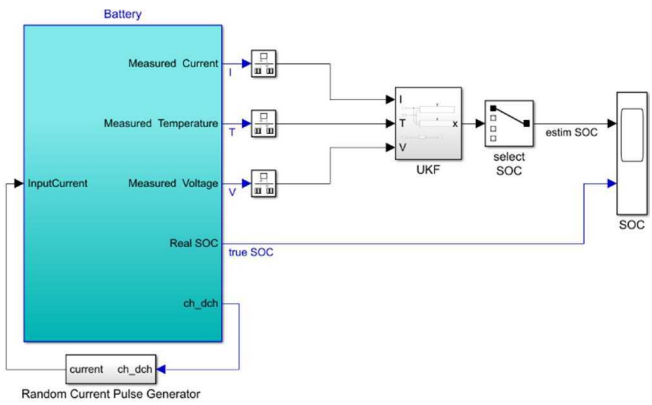

Fig. 6. Simulink diagram implementation of the UKF to estimate SOC.

The UFK has been a selected block parameter from the Simulink library, and the initial specifications have been set according to the default values from the Mathworks documentation [25]. Regarding electrical properties, three rate transition block parameters have been implemented for the voltage, temperature, and current, respectively, to establish the connection with the UFK. In the case of the thermal properties, the convective heat transfer coefficient has been selected from the range of 5 to 25 W/m^2 due to thenatural convective process, with 5 W/m^2 being the recommended value according to the Matlab documentation.

Authorized licensed use limited to: Tallinn University of Technology. Downloaded on January 09,2023 at 14:22:10 UTC from IEEE Xplore. Restrictions apply.

It is important to notice that in the third model, the output curves show the comparison results between the true SOC calculated by the battery using the ECM approach and the SOC estimated by the UFK. Results can be appreciated in Fig. 7.

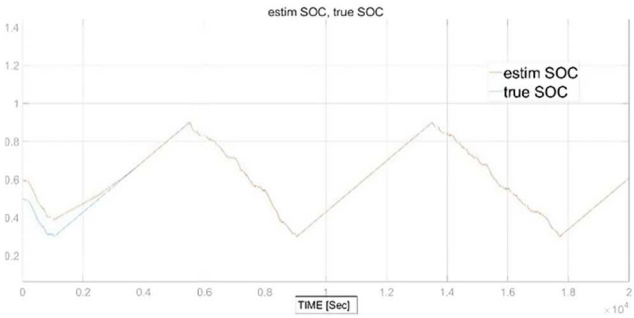

Fig. 7. Curves calculated in the simulink library by implementing the UFK to obtain SOC estimation. A comparison between the Real SOC using the ECM and the estimated SOC using the UFK method is also shown.

Fig. 7 shows that both curves, Real SOC and estimated SOC have similar behavior and almost equal numerical values at the beginning of the simulation, in the same way, it can be appreciated that after a time of 4000 seconds, there is an almost negligible numerical difference between Real SOC and estimated SOC, all this due to the accuracy of the methodologies that are represented in the curves.

It is important to mention that the impact of both SOC and SOH in the BESS depends on the model implementation, so the EV battery lifetime will be the point of analysis when applying the algorithm. One remarkable example of the SOCand SOH impact when implementing the OCV model was developed in 2021 by Essiet and Sun [29], in which the advantages of the Shepherd, Unnewehr and Nernst models were considered to optimize battery charging and maintain grid stability in voltage-to-grid systems (V2G). Among the most important contributions of the model proposed by Essient and Sun [29], are the stability in sag voltages, a cheper charging cost of 26% during V2G operation, and an increase in financial gains for EVS in grid regulation services,thus providing healthy battery status for optimized V2G andGrid-to-Vehicle (G2V) operation.

In conclusion, implementing a battery model mainly dependson the criteria and user specifications to estimate the differenttypes of health and charge indicators. However, there is a complexity regarding the input parameters that affect the output of the model, which is based on the correlation between the input variables due to the applied equations. A solid understanding of the electrical and thermal features of the model is required, which is complemented not only by the physical behavior of the model but also by experimental procedures to validate the results.

IV. CONCLUSION

Different Health and Charge indicators in the most efficient methodologies recently implemented by the researchers are described. Our aim was to familiarize the reader with the importance of lifelong evaluation in BESS. At the same time,the implementation of a BMS must also be considered to provide an optimal estimation of the electrical and thermal parameters of the BESS. Thus, the first step is to apply a robust mathematical model that explains the behavior of the system over a specific time period.

It is fundamental to specify that the approaches to estimate Health and Charge indicators discussed in this article, are mostly focused on lithium-ion batteries, however, other types of batteries are also eligible, so that the battery modeling plays the most important role in the algorithm. Additionally,the performance of the algorithm will depend on the battery characteristics, operating conditions, manufacturing processes, etc.

The complexity of the mathematical model is based on limitations, assumptions, and validation approach to provideaccurate results. However, the implementation of technological tools, such as virtual simulations, numerical methods, Machine Learning algorithms and Artificial Intelligence, has encouraged the development of new technologies in the field of Energy Storage Systems.

In this work, introductory simulations in Simulink were implemented to illustrate the electrical and thermal responsesof the BESS. However, more robust models in combination with major functions performed by a BMS are required to monitor and estimate the health and charge indicators of a BESS.

This work is the basis of the BESS modeling and can be developed to implement algorithms for a BMS to determine their parameter values from lab-test data and how to use themto simulate cell behaviors under different load profiles. Moreover, this work provides a research environment for the development of a digital twin of battery energy storage system for analysis, investigation, and online simulation. This will help establish assessment and verification procedures for possible fault diagnostics to support commercial consulting, research, and testing for enterprises based on the digital twin concept.

Future work will be based on validation of the models according to experimental measurements and battery testing. Predictive maintenance and fault diagnosis will be executed not only to estimate the SOC and SOH, but also to describe and illustrate the Key Performance Indicators (KPIs) of the BESS. Once the KPIs have been obtained in battery modeling, the development of the BMS algorithm will be started so as to initiliaze the digital twin.

REFERENCES

[1] G. Eason, B. Noble, and I. N. Sneddon, “Battery degradation model and multiple-indicators based lifetime estimator for energy storage system design and operation: Experimental analyses of cycling- induced aging”, Electrochemica Acta, vol. 384, pp. 1–12, 2021. (references)

[2] M. Kim, H. Chun, J. Kim, J. Yu, Data-efficient parameter identification of electrochemical lithium-ion battery model using deep Bayesian harmony search, Appl. Energy 254 (2019) 113644.

[3] L.D. Sutter, Y. Firouz, J.D. Hoog, N. Omar, J.V. Mierlo, Battery agingassessment and parametric study of lithium-ion batteries by means of afractional differential model, Electrochim. Acta 305 (2019) 24–36.

[4] W. Waag, S. Käbitz, D.U. Sauer, Experimental investigation of the lithium-ion battery impedance characteristic at various conditions and aging states and its influence on the application, Appl. Energy 102 (2013) 885–897.

[5] H.J. Chang, N.M. Trease, A.J. Ilott, D. Zeng, L.S. Du, A. Jerschow,

Authorized licensed use limited to: Tallinn University of Technology. Downloaded on January 09,2023 at 14:22:10 UTC from IEEE Xplore. Restrictions apply.

C.P. Grey, Investigating Li microstructure formation on Li anodes for lithium batteries by in situ 6 Li/7 Li NMR and SEM, J. Phys. Chem. C119 (2015) 1301200614

[6] P.K.A. Babu, A.S. Waghmare, S.M. Mulla, U.S. Karle, M.R. Saraf, Material characterization of lithium-ion battery cells by scanning electron microscopy & X-ray diffraction techniques, in: Proceedings of the IEEE Transportation Electrification Conference (ITEC-India), 2017.

[7] 1. Vetter, J.; Novák, P.; Wagner, M.; Veit, C.; Möller, K.C.; Besenhard,J.; Winter, M.; Wohlfahrt-Mehrens, M.; Vogler, C.; Hammouche, A. Ageing mechanisms in lithium-ion batteries. J. Power Sources 2005, 147, 269–281. doi:10.1016/j.jpowsour.2005.01.006.

[8] 2. Agubra, V.; Fergus, J. Lithium Ion Battery Anode Aging Mechanisms. Materials 2013, 6, 1310–1325. doi:10.3390/ma6041310.

[9] 3. Redondo-Iglesias, E.; Venet, P.; Pelissier, S. Calendar and cycling ageing combination of batteries in electric vehicles. Microelectron. Reliab. 2018, 88–90, 1212–1215. doi:10.1016/j.microrel.2018.06.113.

[10] Barré, A.; Deguilhem, B.; Grolleau, S.; Gérard, M.; Suard, F.; Riu, D.A review on lithium-ion battery ageing mechanisms and estimations for automotive applications. J. Power Sources 2013, 241, 680–689. doi:10.1016/j.jpowsour.2013.05.040.

[11] Y. Li, D.I.Stroe, Y. Cheng, H. Sheng, X. Sui, R. Teodorescu, "On the feature selection for battery state of health estimation based on charging–discharging profiles", Journal of Energy Storage, vol. 33, pp.1–16, 2021

[12] C. Zhang, Li, D.I.Stroe, Y. Cheng, H. Sheng, X. Sui, R. Teodorescu, "A Novel Battery State-of-Health Estimation Method for Hybrid Electric Vehicles", IEEE/ASME Transactions on Mechatronics, vol. 20, no5, pp. 2604–2612, 2015.

[13] Y.Xing, W.He, M. Pecht, K.L.Tsui, "State of charge estimation of lithium-ion batteries using the open-circuit voltage at various ambient temperatures", Applied Energy, vol 113, pp 106-115, 2014.

[14] Q. Wang, J. Kang, Z. Tang, M. Luo, "An online method to simultaneously identify the parameters and estimate states for lithium ion batteries", Electrochimica Acta, vol 289, pp 376-388, 2018.

[15] H.F. Yuan, L.R. Dung, "Offline State-of-Health Estimation for High Power Lithium-Ion batteries Using Three-Point Impedance ExtractionMethod", IEEE Transactions on Vehicular Technology, vol 66, pp 2019-2032, 2017.

[16] D. Haifeng, W. Xuezhe, and S. Zechang, "A new SOH prediction concept for the power lithium-ion battery used on HEVs," in Proc. 6thIEEE VPPC, Dearborn, MI, USA, Sep. 2009, pp. 1649–1653

[17] R. Xiong, J. Tian, H. Mu, C. Wang, "A systematic model-based degradation behaviour recognition and health monitoring method for lithium-ion batteries", Applied Energy, vol 207, pp 372-383, 2017.

[18] J. Meng, L. Cai, G. Luo, D.I. Stroe, R. Teodorescu, "Lithium-ion battery state of health estimation with short-term current pulse test andsupport vector machine", Microelectronics Reliability, vol 88-90, pp 1216-1220, 2018.

[19] M. Gholizadeh, F.R. Salmasi, Estimation of state of charge, unknown nonlinearities, and state of health of a lithium-ion battery based on a comprehensive unobservable model, IEEE Trans. Ind. Electron. 61 (2014) 1335–1344, https://doi.org/10.1109/TIE.2013.2259779.

[20] C. Hu, G. Jain, P. Tamirisa, T. Gorka, Method for estimating capacity and predicting remaining useful life of lithium-ion battery, Appl. Energy126 (2014) 182–189, ,https://doi.org/10.1016/j.apenergy.2014.03.086.

[21] X. Hu, S.E. Li, Z. Jia, B. Egardt, "Enhanced sample entropy-based health management of Li-ion battery for electrified vehicles", Energy,vol 64, pp 953-960, 2013.

[22] M. Chen, G.A. Rincón-Mora, " Accurate Electrical Battery Model Capable of Predicting Runtime and I–V Performance ", IEEE Transactions on Energy Conversion, vol 21, pp 504-511, 2006.

[23] S. Barsali, M. Ceraolo, "Dynamical Models of Lead-Acid Batteries: Implementation Issues", IEEE Transactions on Energy Conversion, vol17, pp 17-23, 2002.

[24] S. Liu, J. Wang, H. Liu, Q. Liu, J. Tang, Z. Li, "Battery degradation model and multiple-indicators based lifetime estimator for energy storage system design and operation: Experimental analyses of cycling- induced aging", Electrochimica Acta, vol 384, pp 1-12, 2021.

[25] H. Maleki, S.A. Hallaj, J.R. Selman, R.B. Dinwiddie, H. Wang, "Thermal Properties of Lithium-Ion Battery and Components", Journal of The Electrochemical Society, vol 146, pp 947-954, 1999.

[26] G. L. Plett, "Extended Kalman filtering for battery management systems of LiPB-based HEV battery packs: Part 1. Background," J. Power Sources, vol. 134, no. 2, pp. 252–261, 2004.

[27] G. L. Plett, "Extended Kalman filtering for battery management systems of LiPB-based HEV battery packs: Part 2. Modeling and identification," J. Power Sources, vol. 134, no. 2, pp. 262–276, 2004.

[28] G. L. Plett, "Extended Kalman filtering for battery management systems of LiPB-based HEV battery packs: Part 3. State and parameterestimation," J. Power Sources, vol. 134, no. 2, pp. 277–292, 2004.

[29] I.O. Essien, Y. Sun, "Optimal open-circuit voltage (OCV) model for improved electric vehicle battery state-of-charge in V2G services", Energy Reportsm vol 7, pp 4348-4359, 2021.

Authorized licensed use limited to: Tallinn University of Technology. Downloaded on January 09,2023 at 14:22:10 UTC from IEEE Xplore. Restrictions apply.